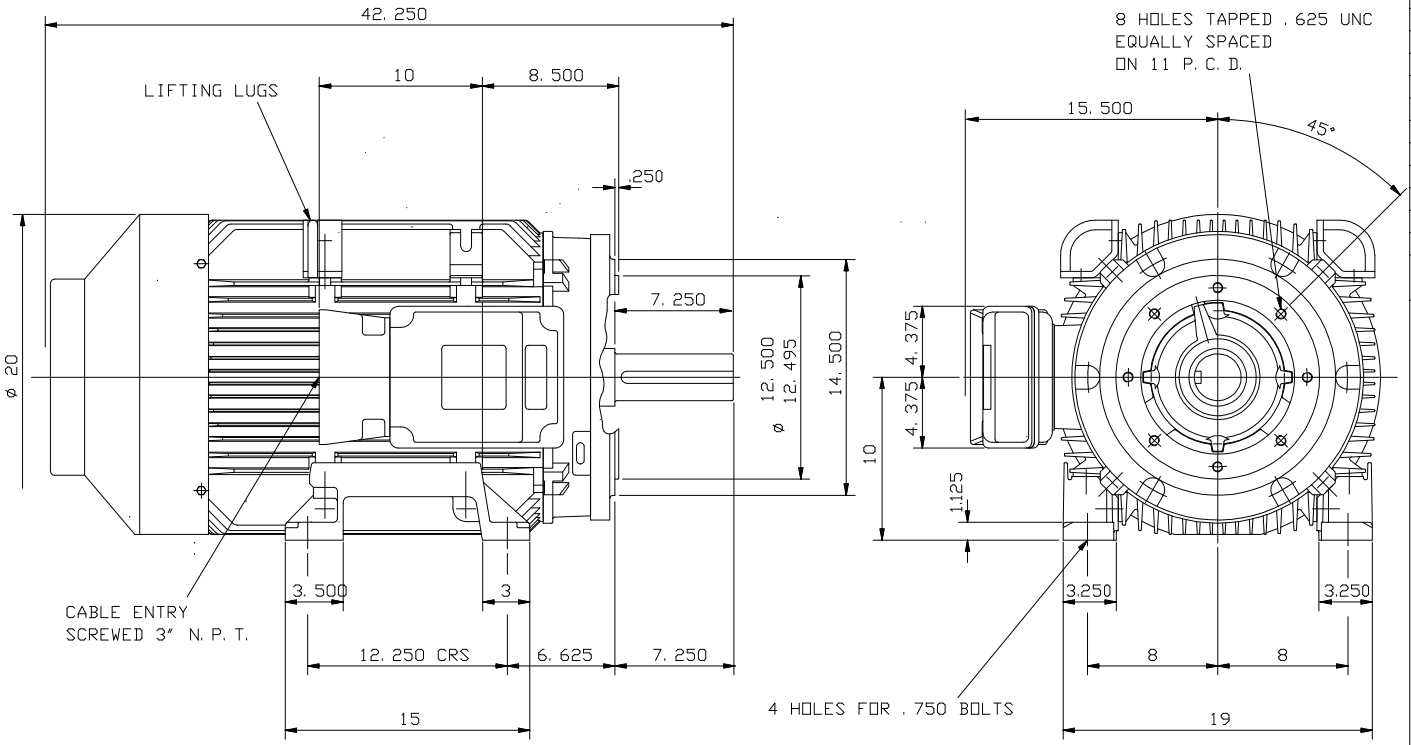

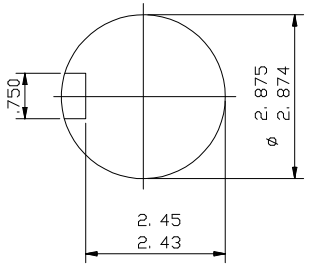

ENLARGED VIEW OF
SHAFT EXTENSION

NOTE: -
TERMINAL BOX CAN BE TOP OR RIGHT
HAND SIDE MOUNTED BY REFITTING FEET
90° IN APPROPRIATE DIRECTION.
CABLE ENTRY CAN BE SUPPLIED IN
ANY ONE OF FOUR POSITIONS AT
90° INTERVALS.

CUSTOMER		
ORDER No.		
SERIAL No.		
FRAME SIZE		
HP	RPM.	
Hz	PHASE 3	
VOLTS	POLES	
BRGS.	DE.	NDE.
MOTOR NETT. WT.		Kg.
INSULATION CLASS		
TEMPERATURE RISE	°C	
DESIGN AMBIENT TEMPERATURE		°C
HEATER WATTS & VOLTS		
	WATTS,	VOLTS
REMARKS		

BROOK CROMPTON
PRELIMINARY

Large Industrial Motors
Guiseley, LEEDS LS20 9NZ

ALL DIMENSIONS IN INCHES

THIRD ANGLE PROJECTION

BROOK CROMPTON

Large Industrial Motors
GUISELEY, LEEDS, LS20 9NZ.

NOTE !
" ENDPLAY WILL BE PROVIDED FOR ENDTHRUST PROTECTION WHEN CUSTOMERS NOTIFY US OF THEIR INTENTION TO USE RIGID COUPLINGS AND DRIVEN MACHINES WITHOUT ENDPLAY.

OUTLINE DIMENSIONS OF STANDARD FOOT/C FACE MOUNTED INCH A. C. MOTOR
TO NEMA STD. MG1. TOTALLY ENCLOSED FAN COOLED.
FITTED WITH SIDE MOUNTED TERMINAL BOX
FRAME SIZE: - WNDF404T.

SCALE	1:7	DATE
DRAWN	BJ Thomas	20.6.94
CHECKED	B. J. T.	20.6.94
APPROVED	I. J. W.	20.6.94

DRG. No. M9711

REVISION: DATE