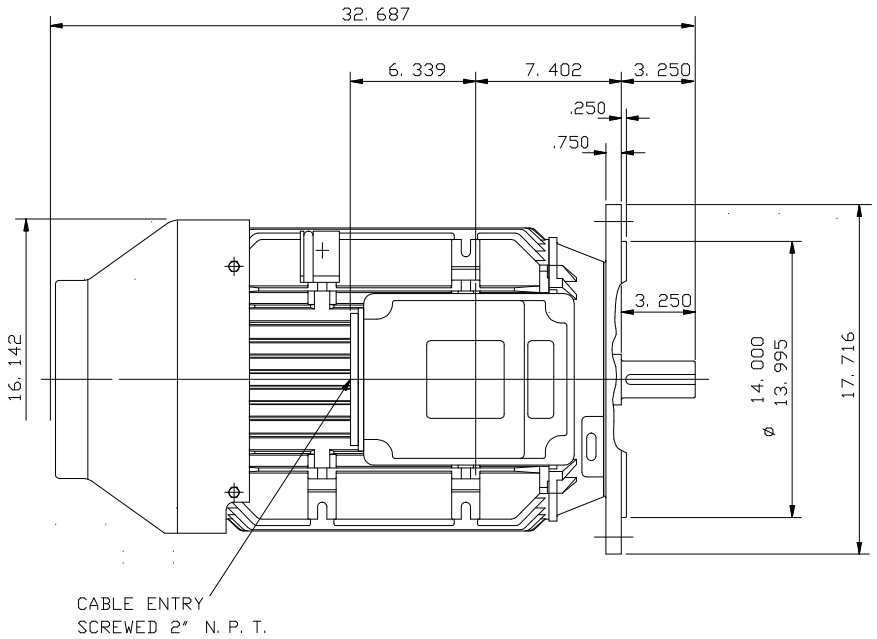


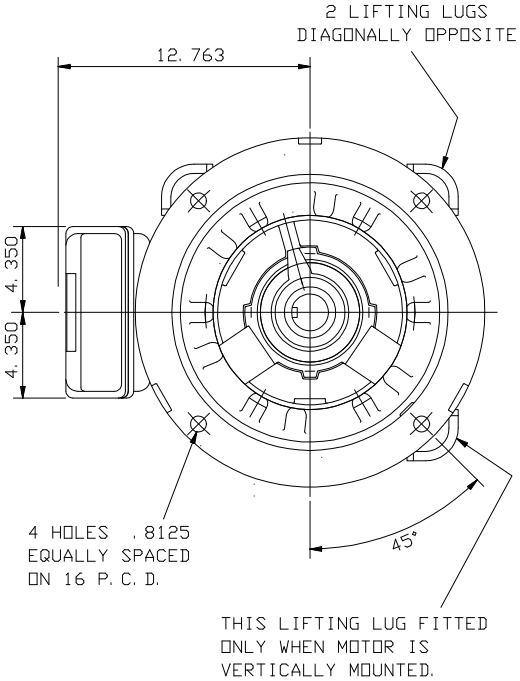


NOTE: -
CABLE ENTRY CAN BE SUPPLIED IN
ANY ONE OF FOUR POSITIONS AT
90° INTERVALS.

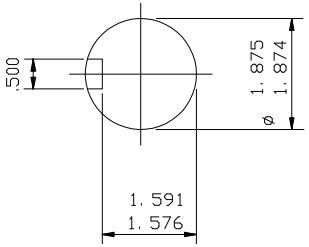


ENLARGED VIEW OF
SHAFT EXTENSION
(SCALE 1: 2)

NOTE: -
STANDARD MACHINES ARE ARRANGED FOR HORIZONTAL OVERHUNG MOUNTING.
CUSTOMERS SHOULD NOTIFY US WHEN ORDERING IF VERTICAL MOUNTING
IS REQUIRED. IF VERTICAL, THE MOTOR THRUST BEARING MUST NOT BE
ALLOWED TO TAKE ANY LOAD OTHER THAN THE WEIGHT OF THE ROTOR
WITHOUT OUR APPROVAL.

| | | |
|---|---|---|
| CUSTOMER | | |
| ORDER No. | | |
| SERIAL No. | | |
| FRAME SIZE | | |
| HP | RPM. | |
| Hz | PHASE 3 | |
| VOLTS | POLES | |
| BRGS. | DE. | NDE. |
| MOTOR NETT. WT. | | Kg. |
| INSULATION CLASS | | |
| TEMPERATURE RISE | °C | |
| DESIGN AMBIENT TEMPERATURE | | °C |
| HEATER WATTS & VOLTS | WATTS, | VOLTS |
| REMARKS | | |

BROOK CROMPTON
PRELIMINARY
Large Industrial Motors
Guiseley, LEEDS LS20 9NZ

ALL DIMENSIONS IN INCHES

THIRD ANGLE PROJECTION

BROOK CROMPTON
Large Industrial Motors
GUISELEY, LEEDS, LS20 9NZ.

NOTE !
" ENDPLAY WILL BE PROVIDED FOR ENDTHRUST PROTECTION WHEN CUSTOMERS NOTIFY US OF THEIR INTENTION TO USE RIGID COUPLINGS AND DRIVEN MACHINES WITHOUT ENDPLAY.

OUTLINE DIMENSIONS OF STANDARD D FLANGE MOUNTED INCH A. C. MOTOR
TO NEMA STD. MG1. TOTALLY ENCLOSED FAN COOLED.
FITTED WITH SIDE MOUNTED TERMINAL BOX
FRAME SIZE : - W-DF326TS-N (4 POLE UP)

| | | |
|---|---|---|
| SCALE | 1:6 | DATE |
| DRAWN | BJThomas | 22.2.94 |
| CHECKED | B. J. T. | 22.2.94 |
| APPROVED | I. J. W. | 22.2.94 |

DRG. No. M9565

REVISION: DATE