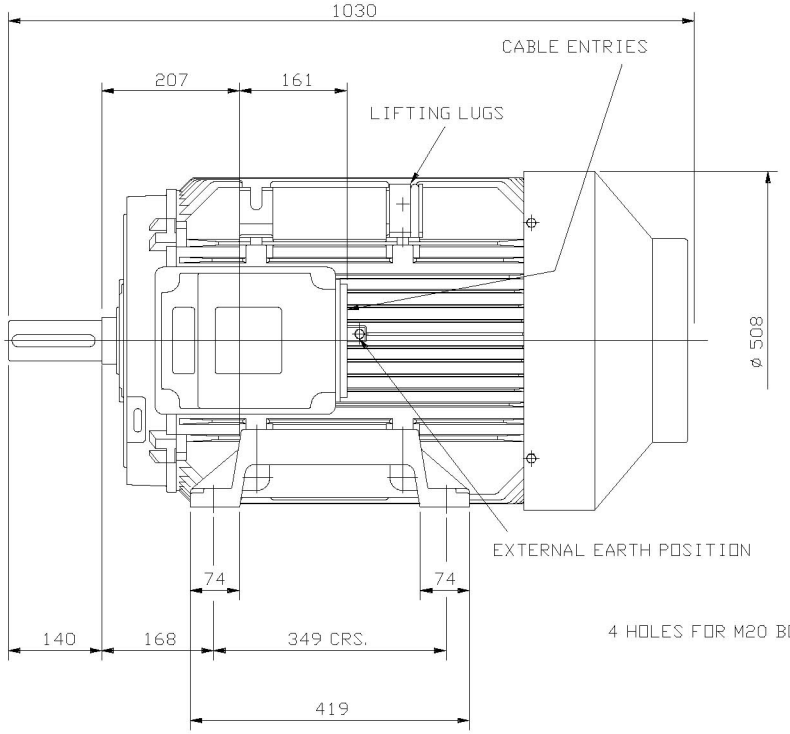

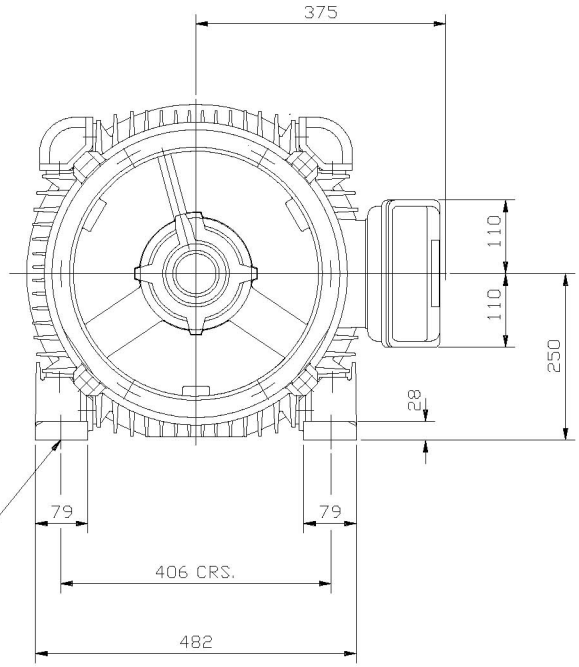

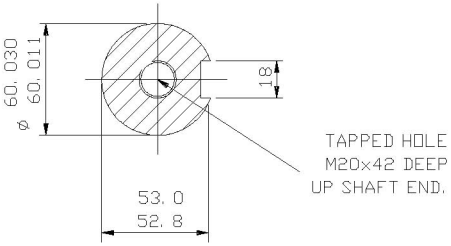

SECTION THROUGH
SHAFT EXTENSION
(SCALE 1: 2.5).

NOTE: - TERMINAL BOX CAN BE TOP OR SIDE MOUNTED (LEFT OR RIGHT) BY REFITTING FEET 90° IN APPROPRIATE DIRECTION. CABLE ENTRY CAN BE SUPPLIED IN ANY ONE OF FOUR POSITIONS AT 90° INTERVALS.

CUSTOMER		
ORDER No.		
SERIAL No.		
FRAME SIZE		
kW	RPM.	
Hz	PHASE 3	
VOLTS	POLES	
BRGS.	DE.	NDE.
MOTOR NETT. WT.		Kg.
INSULATION CLASS		
TEMPERATURE RISE	°C	
DESIGN AMBIENT TEMPERATURE		°C
HEATER WATTS & VOLTS	WATTS,	VOLTS
REMARKS		

ALL DIMENSIONS IN MILLIMETRES

FIRST ANGLE PROJECTION

BROOK CROMPTON

NOTE !
2.5 ENDPLAY WILL BE PROVIDED FOR ENDTHRUST PROTECTION WHEN CUSTOMERS NOTIFY US OF THEIR INTENTION TO USE RIGID COUPLINGS AND DRIVEN MACHINES WITHOUT ENDPLAY.

OUTLINE DIMENSIONS OF STANDARD FOOT MOUNTED METRIC A. C. MOTOR
TOTALLY ENCLOSED FAN VENTILATED.
WITH TERMINAL BOX MOUNTED ON R. H. S. LOOKING ON D. E.
FRAME SIZE: - WDF250M (2 POLE).

SCALE	1:7	DATE	DRG. No.
DRAWN			
CHECKED			
APPROVED			REVISION: DATE