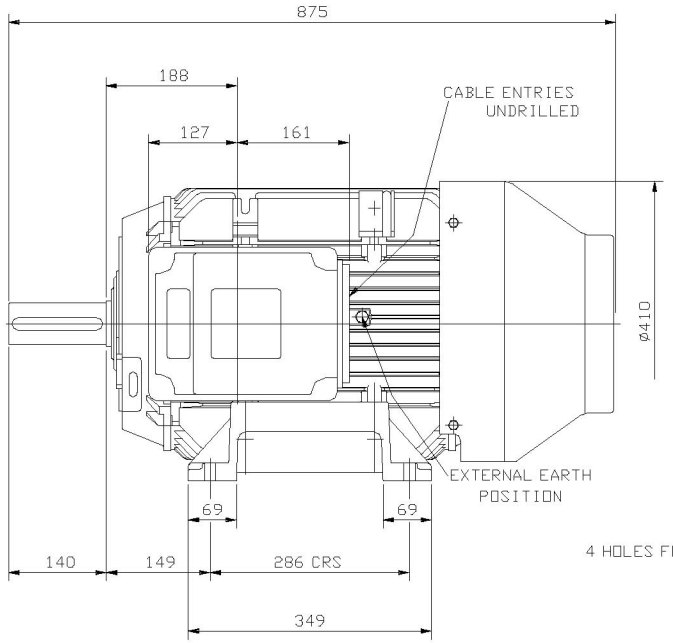

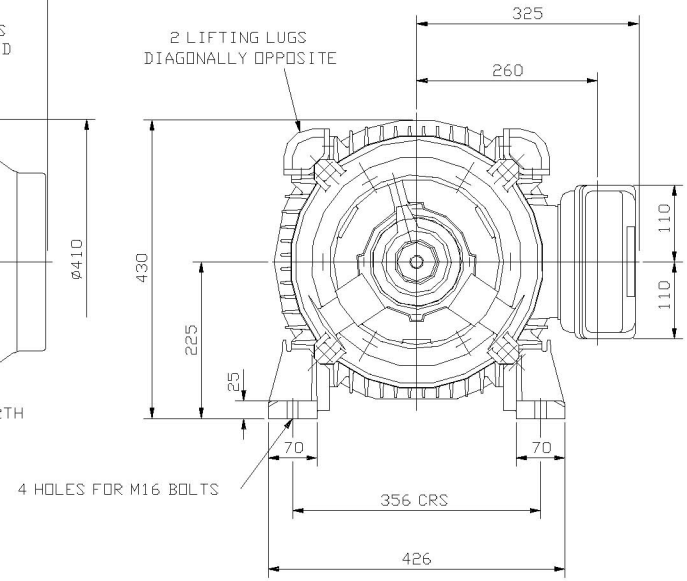

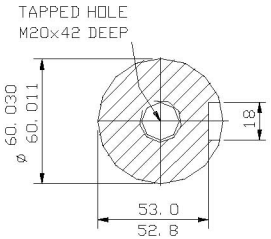

SECTION THROUGH
SHAFT EXTENSION
(SCALE 1:2)

NOTE! TERMINAL BOX CAN BE TOP OR SIDE MOUNTED (LEFT OR RIGHT) BY REFITTING FEET 90° IN APPROPRIATE DIRECTION. CABLE ENTRY CAN BE TURNED TO ANY ONE OF FOUR POSITIONS AT 90° INTERVALS

CUSTOMER	
ORDER No.	
SERIAL No.	
FRAME SIZE	
kW	RPM.
Hz	PHASE 3
VOLTS	POLES
BRGS.	DE. NDE.
MOTOR NETT. WT.	Kg.
INSULATION CLASS	
TEMPERATURE RISE	°C
DESIGN AMBIENT TEMPERATURE	°C
HEATER WATTS & VOLTS	WATTS, VOLTS
REMARKS	

ALL DIMENSIONS IN MILLIMETRES

FIRST ANGLE PROJECTION

BROOK CROMPTON

NOTE!
25 ENDPLAY WILL BE PROVIDED FOR ENDTHRUST PROTECTION WHEN CUSTOMERS NOTIFY US OF THEIR INTENTION TO USE RIGID COUPLINGS AND DRIVEN MACHINES WITHOUT ENDPLAY.

OUTLINE DIMENSIONS OF STANDARD FOOT MOUNTED METRIC A. C. MOTOR
TOTALLY ENCLOSED FAN VENTILATED.
FITTED WITH SIDE MOUNTED TERMINA BOX
FRAME SIZE : - W-DF225S (4 POLE UP)

SCALE	1:6	DATE
DRAWN		
CHECKED		
APPROVED		

DRG. No.

REVISION: DATE