DRG. No.	F80GD002/1
DRG. REF.	

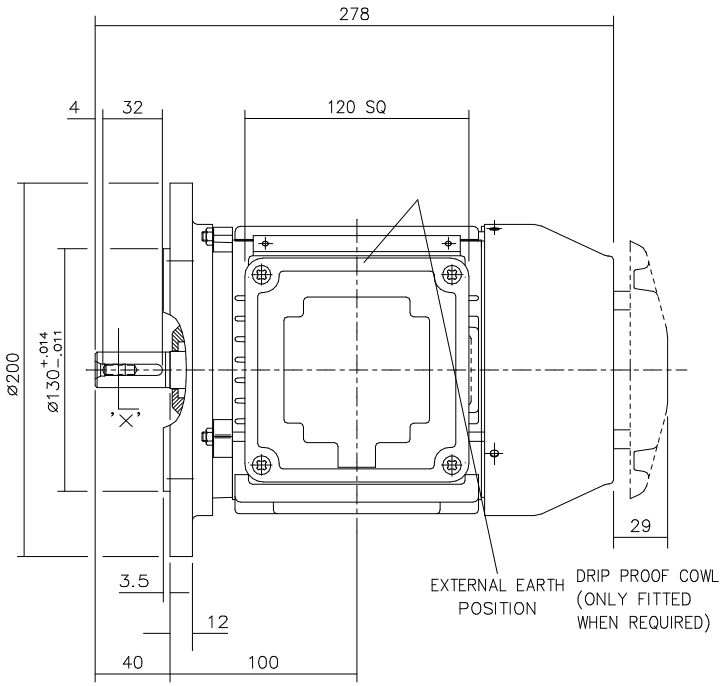

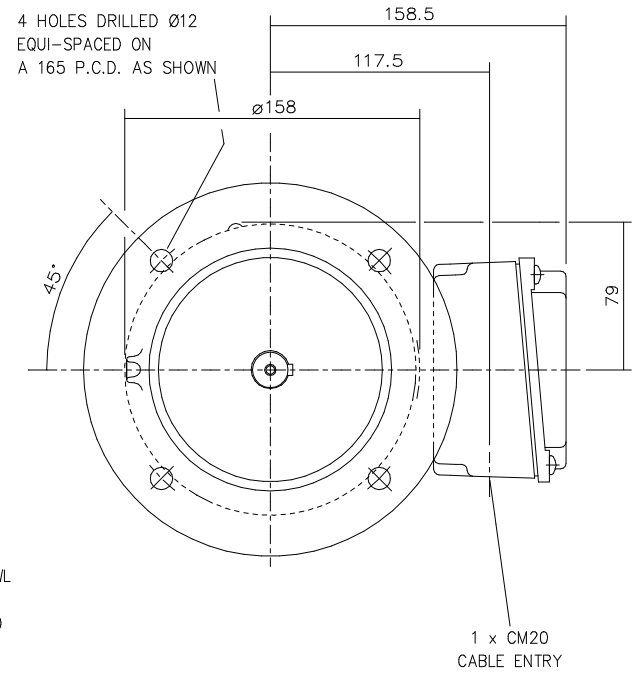

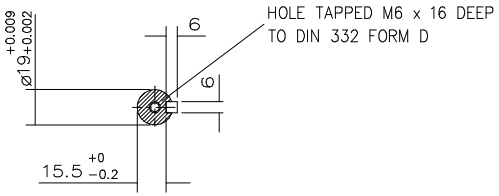

SECTION ON 'X'

STANDARD TERMINAL BOX POSITION IS 3 O'CLOCK AS SHOWN
CONDUIT ENTRIES:- TERMINAL BOX CAN BE ROTATED AT 90° INTERVALS
(CONDUIT ENTRY POSITION SHOWN FOR ILLUSTRATION ONLY)

CUSTOMER		
ORDER No.		
PART No.		
OUR ORDER No.		
FRAME SIZE		
KW.	RPM.	
Hz	PHASE	
VOLTS	POLES	
BRGS.	DE.	NDE.
MOTOR NETT WT.		Kg.
SPECIAL REMARKS		

ALL DIMENSIONS IN MILLIMETRES.

FIRST ANGLE PROJECTION

BROOK CROMPTON
Huddersfield, HD1 3LJ
ENGLAND

SHEET SIZE	TITLE				
A3	OUTLINE DIMENSION DRAWING NEW DESIGN CAST IRON TOTALLY ENCLOSED FAN COOLED 80 FRAME D FLANGE MOUNTED MOTOR		NAME	DATE	
		DRAWN	VLS	02-08-01	DRG. No. F80GD002/1
		CHECKED	RR	02-08-01	DRG. REF.
		SCALE	1 : 2.5		REVISION: RR DATE 19-04-02