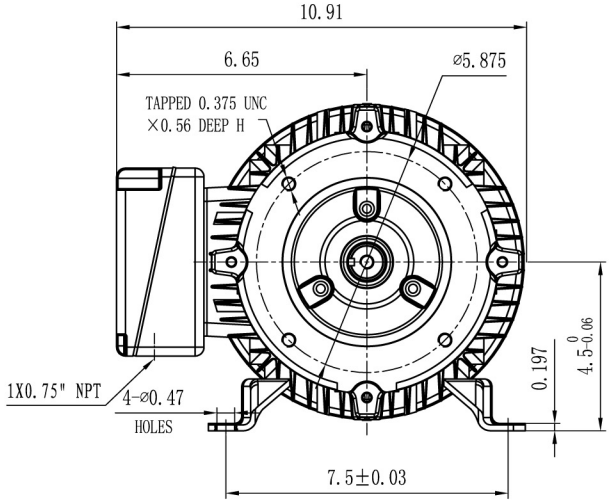

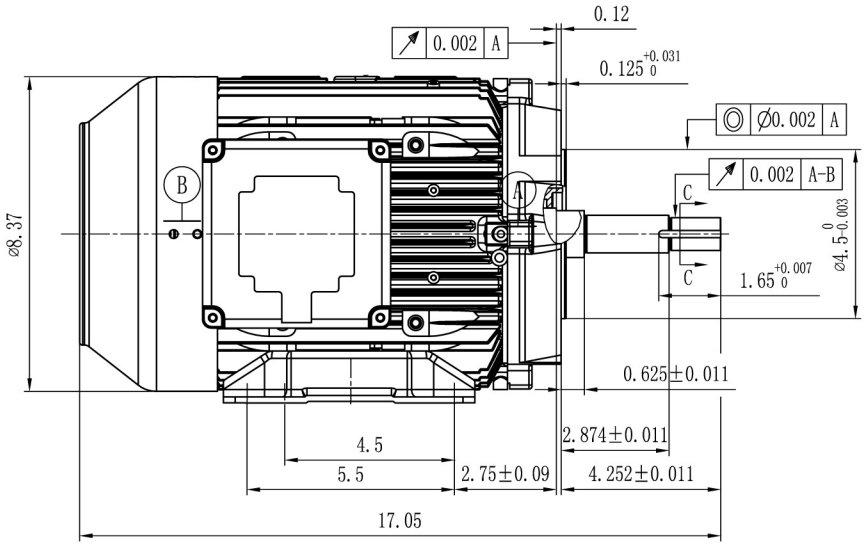

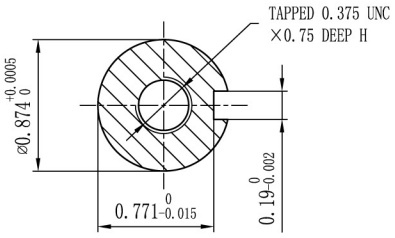

SECTION C-C

Technical requirements:
In order to shaft bearing before and after the file as a benchmark.

Outline-NEMA18JM-short			
BROOK CROMPTON			